# Product Details

## Traditional 75 classic

As of: November 25, 2026

| Description | Model | Carton Quantity |
|---|---|---|
| TUK74-2X2B | T74 | 80 pc per carton |





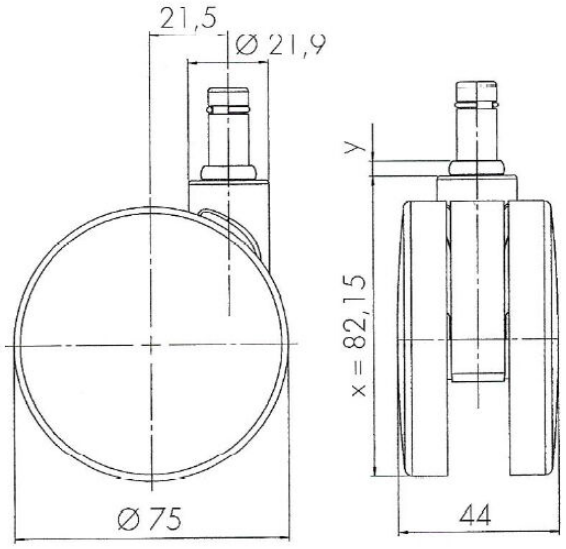


### Technical Details

| | |
|---|---|
| Product Type | Furniture or Chair Caster |
| Wheel diameter | 75mm \| 3" |
| Load capacity | 75kg \| 165 lbs. |
| Overall height with fixing | 82,15 |
| **Wheel:** | |
| Wheel type | Soft wheel |
| Wheel core / tread color | Black / Black |
| **Housing:** | |
| Housing form | unhooded |
| Neck diameter | 21.9mm |
| Housing material | High quality nylon |
| Housing color | Black |
| Mobility concept | Freewheel |
| Fixing | 11x22mm Push -fit stem |
| Description | TUK74-2X2B |

# Product Details

**Fixings**

Compatible with the following available fixings:

**Push fit stems:**

- 10x20mm with 10.3mm circlip
- 10x22mm with 10.5mm circlip
- 11x19.5mm with 11.8mm circlip
- 11x22mm with 11.4mm circlip
- 11x22mm with 11.6mm circlip
- 11x22mm with 11.8mm circlip
- 11x22mm with 11.8 banded K290 4A
- 11x26mm

**Threaded stems:**

- 3/8-16x1"
- 3/8x1"

**Square plates:**

- 38x38mm
- 55x55mm
- 60x60mm