Product Details

Traditional 60 elegance

As of: June 16, 2025

Description	Model	Carton Quantity
TDZB241-5X2C/B	T241	100 pcs per carton

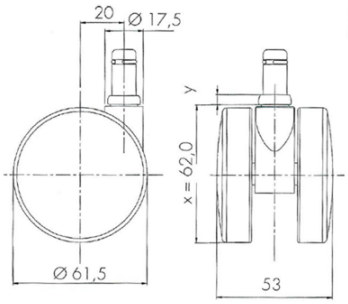

Technical Details

Product Type	Furniture or Chair Caster
Wheel diameter	60mm | 2 ½"
Load capacity	60kg | 132 lbs.
Overall height with fixing	62mm
Wheel:	
Wheel type	Hard wheel
Wheel color	Black
Housing:	
Housing form	unhooded
Neck diameter	17.5mm
Housing material	Zinc die-cast
Housing color	Shiny chrome
Mobility concept	Freewheel
Fixing	11x22mm Push-fit stem
Description	TDZB241-5X2C/B

Fixings

Compatible with the following available fixings:

Push fit stems:

- 10x20mm with 10.3mm circlip
- 10x22mm with 10.5mm circlip
- 11x19.5mm with 11.8mm circlip
- 11x22mm with 11.4mm circlip
- 11x22mm with 11.6mm circlip
- 11x22mm with 11.8mm circlip
- 11x22mm with 11.8 banded K290 4A
- 11x26mm

Threaded stems:

- 3/8-16x1"
- 3/8x1"

Square plates:

- 38x38mm
- 55x55mm
- 60x60mm