Product Details

MOVE 65 classic

As of: June 16, 2025

Description	Model	Carton Quantity
MOVE 65 classic 20H	D565	150 pcs per Carton

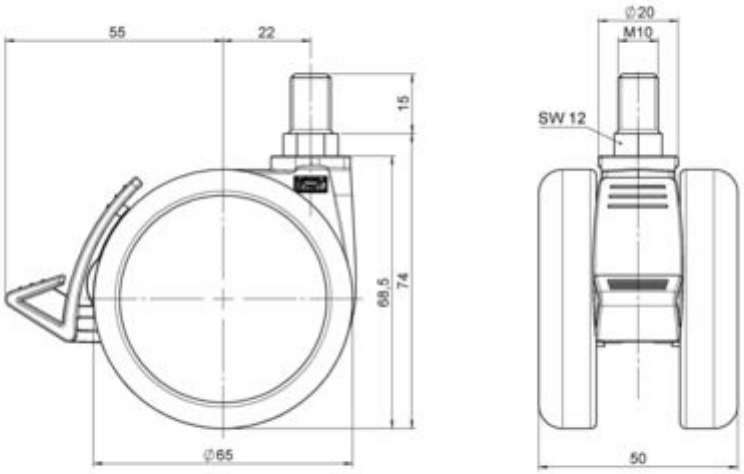

Technical Details

Product Type	Furniture caster
Wheel diameter	65mm | 2.56"
Load capacity	65kg | 143 lbs.
Overall height with fixing	74mm
Wheel:	
Wheel type	Hard wheel
Wheel color	RAL 9005 Jet black
Housing:	
Housing form	unhooded, with neck diameter
Neck diameter	20mm
Housing material	High quality nylon
Housing color	RAL 9005 Jet black
Mobility concept	Delta-Feststeller, RAL 9005 Jet black
Fixing	M10x15mm Threaded stem, unassembled

Product Details

Description	DDKF565 - 3 X10

Fixings

Compatible with the following available fixings:

No-Noise™ Stem:

- 11x19.5mm with 11.4mm circlip
- 11x19.5mm with 11.6mm circlip

Push fit stems:

- 10x22mm with 10.3mm circlip
- 10x22mm with 10.5mm circlip
- 11x19.5mm with 11.4mm circlip
- 11x19.5mm with 11.8mm circlip
- 11x22mm with 11.4mm circlip
- 11x22mm with 11.6mm circlip
- 11x22mm with 11.8mm circlip
- 11x22mm with 11.8 banded K290 4A
- 11x26mm

Threaded stems:

- M8x15mm
- M8x20mm
- M8x25mm
- M10x15mm
- M10x20mm
- M10x25mm
- M10x30mm
- M10x40mm
- M12x20mm
- 5/16-18x1"
- 5/16-18x1/2"
- 3/8-16x1"
- 5/16-18x5/8"
- 3/8-16x1/2"
- 3/8-16x5/8"

Square plates:

- 38x38mm
- 55x55mm
- 60x60mm